RX2c MANUAL

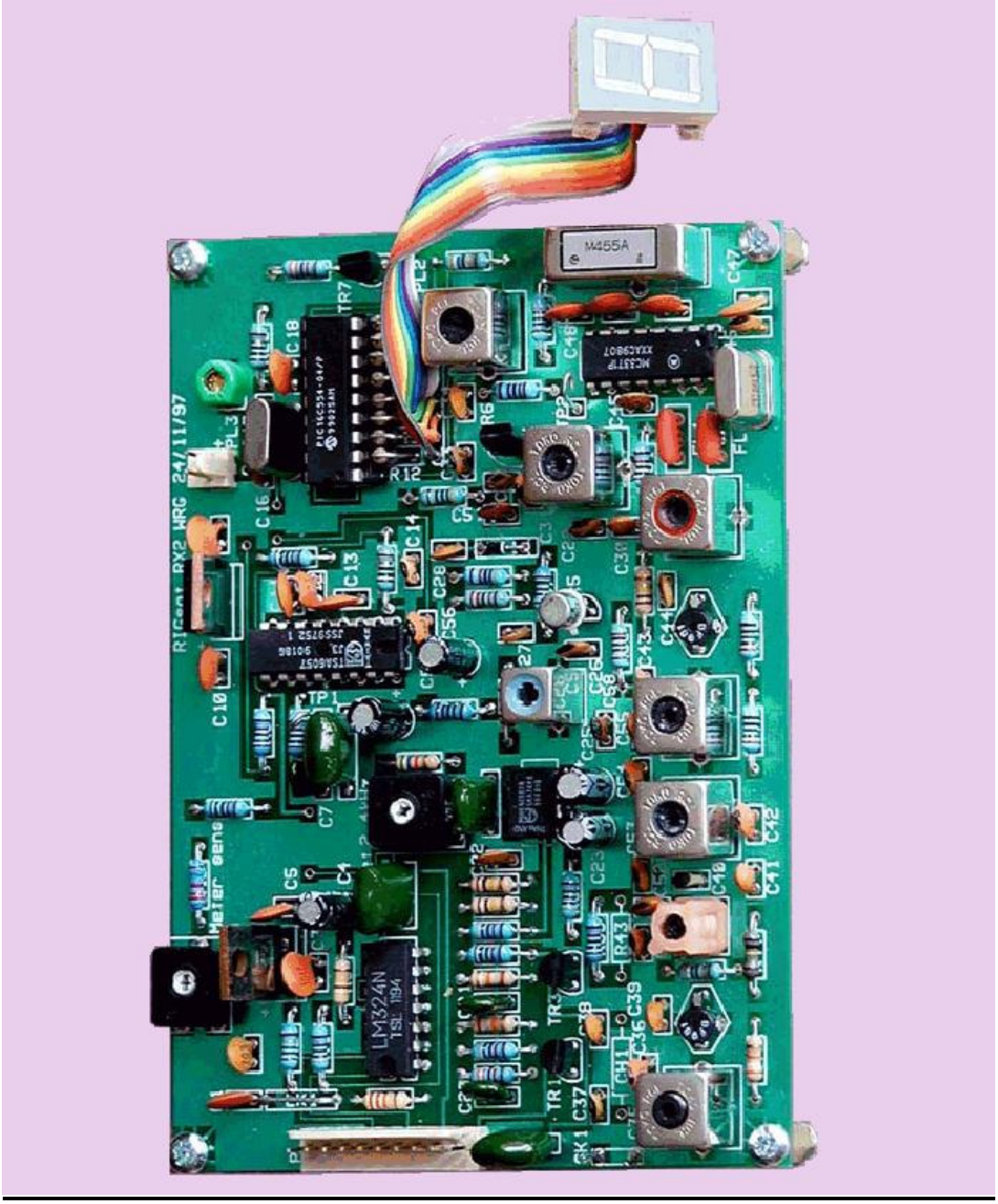
M455A
TR7
PL2
C18
C46
C47
PL3
24/11/97
RX2 WRG
R6
P2
R12
C5
C16
C14
C13
C28
C2
C39
C41
C10
TP1
C7
C1
C22
C23
C42
C18
C41
R43
LM324N
TR4
C36 C39
TR1
C37
CK1

Features

- High performance at reasonable cost
- Small size
- Microcontroller driven synthesiser
- Easy to make with built-in alignment facility
- 5 channel auto-scan a on-board power supply regulation
- Intelligent signal detector with beep alert
- Ergonomic user interface
- Computer Control (with additional kit)

Disclaimer:

Take care when building and operating this equipment. All reasonable precautions were taken in its design and manufacture. The Remote Imaging Group cannot be held liable for any loss, damage or injury caused by any parts, information or software herewith supplied

Do not attempt construction unless you are qualified to do so.

Acknowledgements

- RIGsat Team - Bob Barnes, Steve Drury, Ray Godden and Bryan Taylor
- Max Hadley – For use of his Remote Control Code
- Sam Elsdon – For NOAA-18 upgrades
- Craig Anderson – for inclusion of the Wxtoimg Software
- David Taylor – Author of the PassControl Software

Description

The schematic.

The schematic is in three parts: the RF and IF circuitry on sheet (a), the audio processing etc. on sheet (b) and the controls etc. on sheet(c).

RF circuitry.

The antenna signal is coupled to dual-gate RF amplifier MOSFET *TR2* by tuned circuit *L1* and capacitors *C35*, *C36* and *C37*. An option is to feed DC to a pre-amplifier or downconverter via CHI. Three loosely coupled tuned circuits form a selective band-pass filter coupling *TR6* to DGFET mixer *TR4*. The 4 tuned circuits at 137MHz achieve a high level of discrimination against out-of-band signals and a low level of image response. The local oscillator buffer drives the mixer gate 2 at a high level to provide good signal handling.

The local oscillator svnthesiser system.

This is based on two integrated circuits, a Microchip PIC *16C620A* (*IC5*) micro-controller and a Philips *TSA6057* synthesiser (*IC4*). The micro-controller is programmed to implement the functions of scanning, display driving and controlling the *TSA6057.* Communication between the two chips is via the Philips 1^2C proprietary two-wire clock and data bus.

Integrated on the *TSA6057* are the pre-scaler, reference counter, "N" counter, phase detector, loop amplifier and other functional blocks like power regulator etc - most of the building blocks of a PLL (Phase Lock Loop) synthesiser.

It is used to control the local oscillator, FET *TR6*, by varicap diode *VC1*. *TR5* is a buffer/amplifier providing the high-level drive to mixer *TR4*. For a comprehensive description of the system refer to the article by Steve Drury, in RIG Journal 51 (December 1997).

IF circuitry.

Two ceramic filters *FLI* and *FL2*, matched to the mixer drain by *L6*, attenuate any close-in signals such as pager transmissions before they reach the mixer in the IF chip *IC7*. These filters have a bandwidth of 110kHz enough to pass the weather satellite signal even allowing for the fairly wide center frequency spread of this type of filter. After conversion by mixing with a 10.245MHz crystal oscillator the 455kHz signal passes through *FL3* to the high gain IF amplifier in *IC7*. *FL3* is a high performance ceramic filter with a 6dB bandwidth of about 38kHz. This might be thought to be rather narrow for the application: theoretically allowing for deviation, sidebands, tolerances, drift and doppler shift would require a bandwidth nearer 45kHz.

However in practice, provided the synthesiser reference is set correctly, there is no perceptible image impairment. In the UK we suffer from pager transmissions as close in frequency as 137.975MHZ as well as other in-band digital transmissions one of which is at 137.820MHZ, only 30kHz away from the Meteor frequency of 137.850MHz. In these circumstances a filter having minimal bandwidth is an advantage.

After amplification and limiting *IC7*'s quadrature discriminator demodulates the FM signal; *L8* is the tank-tuned circuit. The RSSI (Received Signal Strength Indication) output from pinl3 feeds the optional S-meter via emitter follower *TR7*. This gives an accurate logarithmic reading, linear in dB, over a wide range of signal strength.

AF Circuitry.

After demodulation the satellite 2.4kHz sub-carrier carrying the image information is low-pass filtered by *IC1a* then amplified by *IC1b* and fed via the output socket *SK4* to the sound card in your computer. The peak output signal level is approximately 1.5V r.m.s. Part of the signal is fed to *IC3*, a PLL (Phase Lock Loop) tone detector. This stops channel scanning when the 2.4kHz sub-carrier is detected, if the receiver is in this mode, and opens the loudspeaker mute circuit *TR1* and *TR2*. This system is very reliable and seldom, if ever, operates with other than a weather satellite signal. Switch *SWI* allows the mute to be opened manually if required. *LC1c* drives the loudspeaker.

Regulators *IC2* and *IC5* provide stabilised 12 volt and 5 volt rails for all circuitry. The input supply should be in the range 12-20 volt DC at 100mA. If an S-meter with a backlight is used then current drain will be increased. Similarly if a coax powered pre-amplifier or down converter is connected additional current will be drawn.

Building the RX2c

The kit.

Included are: the PCB and all PCB mounted parts; the 7-segment display; volume control, knob and switch; loudspeaker; metal mounting spacers and screws; ribbon cable; coil adjustment tool and power connector.

Not included are; the antenna and output connectors: S-meter; case; power supply.

Before you start

Before turning on your soldering iron **READ THESE INSTRUCTIONS CAREFULLY!**

Be sure you can identify all the components. **CHECK and CHECK AGAIN** that you have the correct part inserted before soldering - extracting it afterwards is likely to damage both the component and the PCB.

TAKE PARTICULAR NOTE of points in bold text like this one. They are as a result of experience gained in repairing RX2's that builders have failed to make work.

Components such as integrated circuits, transistors, diodes, electrolytic capacitors, and connectors etc. could be inserted incorrectly - check orientation before soldering. Some devices; the dual-gate FETs, PIC micro-controller and the TSASO57 synthesiser are static sensitive – before handling them discharge any charge you might be carrying by touching something that is grounded.

Do not be tempted to adjust the coils, alignment will be easier if they are left alone.

Use a fine-tipped soldering iron. Before starting assembly fit the 4 spacers to the board to protect the tracks and to ease handling. All holes are plated-through, solder from underneath the board using solder sparingly to avoid bridging tracks and causing short circuits.

Identifying components.

If you are not sure how to read resistor values consult one of the guides published in many reference books, catalogues etc. Some capacitors are marked with their values e.g. '8p2' = 8.2pF, others use more obscure coding.

The larger-value ceramic capacitors use a code such as '104'. This means 10 followed by 4 zeros = 100,000pF or I00nF.

Mylar capacitors use a similar method e.g. '2A473K'. This means 47 followed by 3 zeros = 47,000pF or 47nF, the '2A' and 'K' can be ignored.

Construction

Start by fitting the resistors and ceramic capacitors followed by the transistors and lamer capacitors. If in your kit *TR6* Is a J310 transistor then it must be fitted in a reversed position relative to the outline on the PCB. Push the resistors and capacitors down to the PCB so that they have short leads. It will be easier and quicker to bend all resistor leads, except *R12* - *R19*, to the correct length with fine-nosed pliers before starting assembly. *RI2* to *RI9* are mounted vertically but should not be fitted yet.

Capacitor *C60* (1n) is fitted underneath the PCB, soldered with short leads between *R32* (2.7k) and the ground pin of *C23*. Transistors *TR2* and *TR4* are fitted with their markings (BF988) uppermost with the long (drain) leadout towards the right of the PCB, varicap diode *VC1* with its white band (cathode) towards the front.

Next cut 20cm of the ribbon cable, remove one wire leaving 9, separate the conductors at each end and strip 0.5cm of the insulation from each one. Tin the ends. Insert the stripped conductors into the PCB where it is marked PL2 (a plug is not used) and solder them in. Fit resistors *R12-R19*, mounted vertically. Now fit the coils, crystals, filters and connectors *PL1* and *PL3* **with their pins facing outwards.**

Coil L2 must be correctly orientated with the short rib of its former aligned with the outline shape, towards *C52*. Make sure that you do not confuse coils *L6* and *L8*. They both have 5 pins: L6 is the one with the red ring.

Finally fit the ICs. An 18-pin DIL socket is provided for the micro-controller *IC6*; do not insert ICC at this point. *IC4, T5A6057*, and *IC7*, *MC3371* are high-gain high-frequency devices and must be soldered directly to the PCB, not fitted in sockets. **Regulators 1C2 and ICS must have their markings facing towards the back edge of the PCB, the metal tags facing the front edge.** Link LK1 should not be fitted until after *VR2* is adjusted during alignment so that receiver noise does not make accurate setting difficult

Connect the ribbon cable to the 7-segment display. Make the two test points by forming one end of each of two pieces of cut-off component wires into a loop and solder them into the board at points *TP1* and *TP2*. **The *TP2* wire should be short so that it cannot touch the nearby coil can.**

Strip the insulation from one end of the remaining ribbon cable and attach 10 of the conductors to connector inserts, by crimping if you have a suitable tool, otherwise by soldering. Insert them into the 10-pin socket housing. The free ends connect to the controls - see schematic (c) for the details. **The inserts must be fitted so that the projecting tabs on their sides engage with the apertures in the housing.**

Similarly assemble the 2-pin power socket with a twin cable and connect the other end to the power connector, being careful about polarity.

Connect a short piece of coaxial cable to the receiver input (SK1), the other end to be connected to a suitable socket for connection to the antenna. **Separate only the minimum length of the screen at each end so that both the separated screen and the exposed centre conductor are short.**

If you are intending to use a coax-powered pre-amplifier or downconverter you will need to fit choke *CH1* and resistor *R43*. These components are not supplied with the kit. A suitable value for *CH1* is 2.2ȚH. The value of *R43* depends on the requirements of your pre-amplifier or downconverter, in most case a link or another choke can be used. Note that this receiver is very sensitive; only a pre-amplifier fitted close to the antenna is likely to provide any benefit and its gain should be sufficient only to overcome feeder losses otherwise problems with local high-level signals such as pager transmissions could be exacerbated.

Contact the RIGShop if you require *CH1*.

Now connect the switch, volume control and push button controls and the loudspeaker to the 10-way ribbon cable. **Fit *IC6* taking static precautions, confirming orientation and that all pins are correctly inserted in the socket, not bent underneath the chip.**

Now your RX2c is ready for testing and alignment.

Preliminary testing.

Before applying power examine the PCB carefully to ensure that no tracks have been bridged with solder. **The most common cause of problems is soldered joints that are not sound. Check very carefully, with a magnifying glass if necessary, that all joints have been properly soldered. Enough heat must be applied to flow the solder from lead wire to PCS pad.**

Check all connections from the 10-pin connector *PL1*; from the power connector *PL3* and from *PL2* to the 7-segment display.

The RX2 is designed for use with an unregulated power supply giving 12 to 20 volts DC on load. Connect the power supply and switch on. There should be a beep from the loudspeaker and the display should light and indicate each channel 0 - 9 in turn. Pressing the button briefly should stop the scan and further brief presses index through the channels. A longer press should restart the scan. Scan mode is indicated by the decimal point being lit.

If all is well you can now proceed with alignment. If not, compare voltages with the figures in this information to trace and rectify the problem. Before going further refer to the RX2 operating information below.

Alignment

How you align the RX2c will depend on your resources and experience. The procedure given here assumes that you have only basic test equipment such as a voltmeter (preferably digital). Connect your voltmeter to *TP1*. Set the channel to 3. Adjust the core of *L7* slowly for a reading of 3.OV. If the reading is less than 3.0V turn the core inwards, if it is higher turn it outwards. **If you cannot make this adjustment your RX2c will not work. Check carefully the parts and wiring around *IC4*, *TR5* and TR6. Do not assume that IC4 is at fault and try to remove it: it is highly unlikely that it or any other IC is defective.**

If you have a frequency counter connect it to *IC3* pin 5 and adjust *VR2* to give reading of 2,400 c/s. To set the reference frequency stop scan on channel 3 and loosely couple your counter to *C26*. Adjust trimmer *TCl* to read a frequency of 126.800MHz. If your counter cannot measure this frequency, couple it to *IC4* pin 9 and adjust *TC1* to get 40,000.0c/s. If you have no counter skip these steps and set *VR2* (slot vertical) and *TC1* (slot horizontal) to mid positions. Now fit link *LK1*, ensuring that it is clear of the tracks underneath it.

Now switch off and connect an antenna. At this point almost any piece of wire will probably serve the purpose. Hold down the push button and switch on.

The display should now show **'t'**. The receiver is tuned to 137.970MHZ, close to a pager frequency that provides a strong signal throughout most of the UK. Un-mute the loudspeaker with SW1. With luck you will hear noise in the

speaker punctuated with bursts of pager signals, unmistakable but difficult to describe.

Connect either a voltmeter or an S-meter to the meter output. If you are receiving a pager signal adjust coils *L1*, *L2*, *L3*, *L4*, *L5* and *L6* for maximum reading. Switch off, then on and set to channel 3 and disconnect the antenna. Connect your voltmeter to *TP2*.

Watch the reading whilst rotating the core of *L8*. It should rise to a maximum as the core is wound out to the top of the can and fall as it is wound in to the bottom. Note the readings, add them together and divide the result by 2. Now set the core to get this voltage. For example…

if Vmax is 2.2V and
Vmin is 1.6V, then
Vmax + Vmin = 3.8V and the
aim voltage is 3.8/2 = 1.9V.

If you are not in the UK then the facility for alignment using a pager signal is not possible but you should still be able to achieve alignment using a weather satellite signal if you do not have a
signal generator. The correct position is close to the point of maximum noise in the speaker.

For the last step you will need an actual satellite signal. Connect your antenna, find the predicted time for the next pass, using a prediction program or by consulting the current RIG Journal, and set the RX2c to the appropriate channel.

Connect the voltmeter to *TP2*. When the signal is strong, the satellite being at its closest, confirm that the reading is close to the voltage you calculated. If you were unable to set the reference frequency with a counter then adjust *TC1* to make this the case.

If you have not already set the tone decoder *IC3* to 2.4kHz then you will need to use a satellite signal to do so. Start with *VR2* slider at about 11 o'clock. During a pass put switch SWI in the mute position. Rotate *VR2* first to one end and then slowly towards the other. The speaker should un-mute then mute again. Set *VR2* in the position mid-way between these points.

Finally, whilst receiving a signal, trim the adjustments to coils *L1*, *L2*, *L3*, *L4*, *L5* and *L6* to give maximum reading at the S-meter output. Do not repeat this operation too often - coil cores can seize and fracture. If you are using an S-meter its sensitivity can be set by *VR1*. Your RX2 is now ready for use.

Operation of the RX2

On switch-on there is a beep and the RX2 starts in scanning mode, indicated by the display decimal point being lit. Each channel is monitored for tour seconds.

Channel frequencies: -

Channel Number	Frequency (MHz)
0	137.20
1	137.10
2	137.40
3	137.50
4	137.62
5	137.91
6	137.30
7	137.70
8	137.80
9	137.85

The channel allocation reflects the order used by David Taylor in his PassControl software.

If a valid signal is detected there is an alert beep, scanning stops and the speaker un-mutes. If the signal disappears for more than 15 seconds scanning restarts and the speaker mutes again: SWI can un-mute it at all times if required.

Should you find the alert beep annoying it can be silenced by disconnecting *C2*.

Pressing the push button briefly (beep) will exit from scanning mode. Subsequent brief presses (beep) index through the channels. A prolonged press (double beep) reverts to scanning mode. Holding in the button during switch-on tunes to 137.970MHz, near to a pager frequency, and displays '**t**'. Switching off and on again restores normal operation.

If you have any difficulties please check your RX2 carefully to ensure that it is properly built – that all components are in their correct positions, all joints are sound and that no tracks are bridged with solder – before contacting a helpline.

Do not attempt to remove any ICs before having done so.

Troubleshooting

How you proceed will depend on the symptoms. First confirm that all components are in their correct positions, all joints are soldered and no tracks are bridged.

Power

If there are no signs of life and the display is not lit the fault is likely to be in the power supply system. Check the +5V and +12V rails at the points marked on the PCB. If the voltages are correct then refer to the voltage guide below to locate the probable area of the fault. If the display and controls function but no noise is audible from the speaker when un-muted then investigate the circuitry around *IC1*. If all else fails consult one or the help lines but please make an effort
yourself first!

Voltages under no-signal conditions, speaker muted. Do not expect to measure exactly the same values.

IC1	1	5.0	IC3	4	5.0	IC4	3	4.8	IC6	4	5.0	IC7	8	4.9
	7	5.0					16	8.5		14	5.0		4	4.9
	8	5.0											7	3.8

TR1	e	5.0	TR2	g2	2.1	TR3	e	4.5	TE4	d	11.7	TR5	e	2.0
	b	5.7		d	7.2		b	5.8					b	2.6
	c	5.0											c	7.6

TR6	s	1.1	TR7	e	0.1
	d	7.2		b	0.6
				c	5.0

The case

The case can be of any type that you feel is suitable but if it is not made of metal some provision for screening the PCB to prevent the pick up of strong broadcast signals at the IF frequency will be needed. This can take the form or a layer of aluminium foil glued to the inside bottom of the case. Make sure it has good contact to the 4 spacers and that it cannot touch the underside of the PCB. If you wish to connect an S-meter it should have an FSD (Full Scale Deflection) of around 250µA. A suitable meter is Maplin part number *LB8OB*.

Power supply

The RX2c requires a supply of 12-18 volts at lOOmA. As regulators are incorporated the supply can be unregulated provided its minimum voltage, allowing for ripple, does not fall below 15V. A 12V plug-top type of unit can be used, - with a light load such as the RX2 the output voltage will in fact be much higher than the nominal 12V.

If an additional load such as a. meter back light and/or preamplifier is used then the power supply rating will need to be increased.

Remote Control

The upgraded PIC includes the Max Hadley Remote Control software. To work with the RX2 this requires a simple interface to the PC. Details can be found at:

http://www.susato.demon.co.uk/RX2remote.html

A kit is available from the RIGShop.

Software

Your RX2c is supplied with a copy of the WxtoImg software. This is a fully automated APT and WEFAX weather satellite (wxsat) decoder. The software supports recording, decoding, editing, and viewing on all versions of **Windows**, **Linux**, and **MacOS X**. WXtoImg supports real-time decoding, map overlays, advanced colour enhancements, 3-D images, animations, multi-pass images, projection transformation (e.g. Mercator), text overlays, automated web page creation, temperature display, GPS interfacing, and control for many weather satellite receivers, communications receivers, and scanners.

More information at:

http://www.wxtoimg.com/

The following advice appeared in RIG Journal 56.

RIGsat Team - Bob Barnes, Steve Drury, Ray Godden and Bryan Taylor

Hints on construction.

These notes have been prepared as a result of our experiences in dealing with non-functioning RX2 kits that have been returned to us for repair.

Soldering. Almost all returned kits have had some poor soldered joints and in many cases this has been the cause of failure. Enough solder should be applied to the joint at sufficient temperature to 'wet' both the component lead and the PCB pad. A surprising number of kits have been returned with some joints not soldered at all! Use a magnifying glass to inspect all joints before applying power.

Fitting components. Be quite sure you have correctly identified all parts before placing them in the board. Ceramic capacitors are easily confused, particularly 1pF with 1nF etc. Do not lose the tiny varicap diode VC1. The regulators, IC2 and IC5, have their metal tabs **facing into the PCB**; damage will result if fitted incorrectly. If coils and their cans are supplied separately first fit the coils to the board and then orientate the earthing lugs of the can with the PCB holes before pressing it over the coil - once on the coil the can cannot be removed without damage. Plug PL1 has pin1 towards **C19 screen printing, (see the PCB overlay in the instructions)** ; PL2 has pin1 towards the left **facing C15**. Connect the 10-way ribbon cable so that pin1 is brown and the colours will follow the resistor number code, making identification at the other ends simple.

Alignment without test equipment. First make sure you have the correct voltage on TP1. Set the core of L1 flush with the top of its can; L2, L3 and L4 one turn down; L5 to the middle of the former. **L8 can be roughly aligned for maximum noise with the mute open.** Do not move the cores of L6. Now follow the procedure in the instructions.

If it does not work. Check that all components are in their correct positions and that all soldered joints are sound. Make sure that the connections from PL1 to the controls and from PL2 to the 7-segment display are correct. Compare voltages with those in the instructions, this could point to the fault. Do not attempt to remove any IC that you are suspicious of - they are rarely faulty unless having been subject to static, excessive voltage or short circuits. If you are unsuccessful in overcoming the problem then seek advice before becoming frustrated by contacting one of the help lines: do not return your RX2 without having done so.

PARTS LIST

Item	Description	Qty	Item	Description	Qty	Item	Description	Qty
IC1	LM324		R37	100		C35	3p3	2
IC2	LM7805		R38	22K		C36	8p	
IC3	NE567		R39	47K		C37	22p	
IC4	TSA6057		R40	2K2		C38	1n	
IC5	LM7810		R41	39K		C39	1n	
IC6	PIC 16C620A		R42	47		C40	12p	
IC7	MC3371		R43	Not supplied		C41	1n	
TR1	BC239	3	R44	100K		C42	15p	2
TR2	BF988	2	R45	2K2		C43	15p	
TR3	BC239		R46	Not present		C44	10n	
TR4	BF988		R47	270	2	C45	10n	
TR5	BF199		R48	8K2		C46	33p	
TR6	**2SK168/J310***		R49	270		C47	100p	
TR7	BC239		R50	100K		C48	100n	
XT1	4MHz		R51	10K		C49	100n	
XT2	10.245MHz		VR1	10K		C50	100n	
R1	47K	4	VR2	4K7		C51	3p3	
R2	1M		VR3	50K log		C52	1p	4
R3	470K		C1	100n	11	C53	1p	
R4	10K	7	C2	10n	7	C54	1p	
R5	10K		C3	100n		C55	1p	
R6	10K		C4	22µ	4	C56	22µ	
R7	Not present		C5	100n		C57	4.7p	2
R8	10	2	C6	100n mylar	2	C58	4.7p	
R9	10K		C7	4n7 mylar		C59	10p	
R10	2K2	3	C8	22µ		**C60**	**1n***	
R11	470		C9	220n mylar		VC1	BB405	
R12	820	8	C10	100n		TC1	30p	
R13	820		C11	100n		L1	100 113	
R14	820		C12	22p	2	L2	Orange coil	
R15	820		C13	100n		L3	100 112	3
R16	820		C14	2p		L4	100 112	
R17	820		C15	100n		L5	060-02-02466	
R18	820		C16	39p		L6	K3892A	
R19	820		C17	33p	4	L7	100 112	
R20	10		C18	100n		L8	RMC14602	
R21	33K	2	C19	100n mylar		CH1	Choke 2.2 µH	
R22	47	2	C20	2n2 mylar	2		(not supplied)	
R23	22K	2	C21	2n2 mylar		FL1	FILT. 10.7M	2
R24	33K		C22	10n		FL2	FILT. 10.7M	
R25	47K		C23	22µ		FL3	CFM455A	
R26	18K	2	C24	47n mylar		PL1	10 pin PCB	
R27	18K		C25	1µ		PL2	9p wired	
R28	10K		C26	33p		PL3	2pin PCB	
R29	47K		C27	10n		PL4	DC conn	
R30	100K	4	C28	10n		PL5	DC connector	
R31	100K		C29	33p		SK1	10 pin shell + ins	
R32	4K7		C30	1n	5	SK3	2 pin shell + ins	
R33	10K		C31	10p	2	SK4	Not supplied	
R34	5K6		C32	12p	2	SW1	DPDT switch	
R35	1K		C33	18p		PB1	Push button	
R36	2K7		C34	10n		SP1	Speaker 64Ω	

*** See text**

Also supplied: 7 segment display, 10-way ribbon cable, M3 spacers (4), control knob, M3 bolts (8)

Capacitors marked: 101=100p , 102=1n, 103=10n, 104=100n, 222= 2n2, 472=4n7, 473=47n

Diagram A – IF and RF circuitry

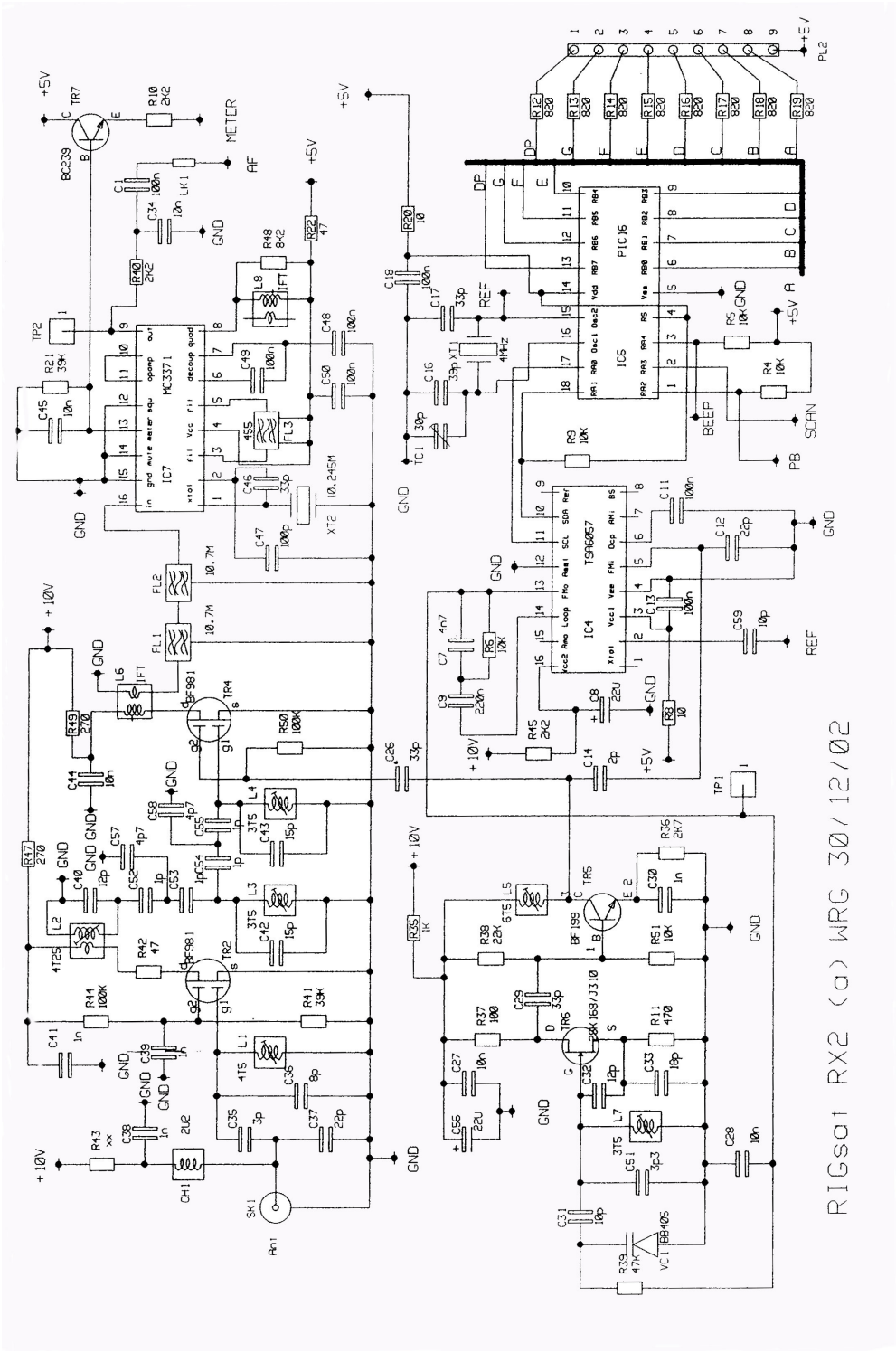

Diagram B – audio processing etc

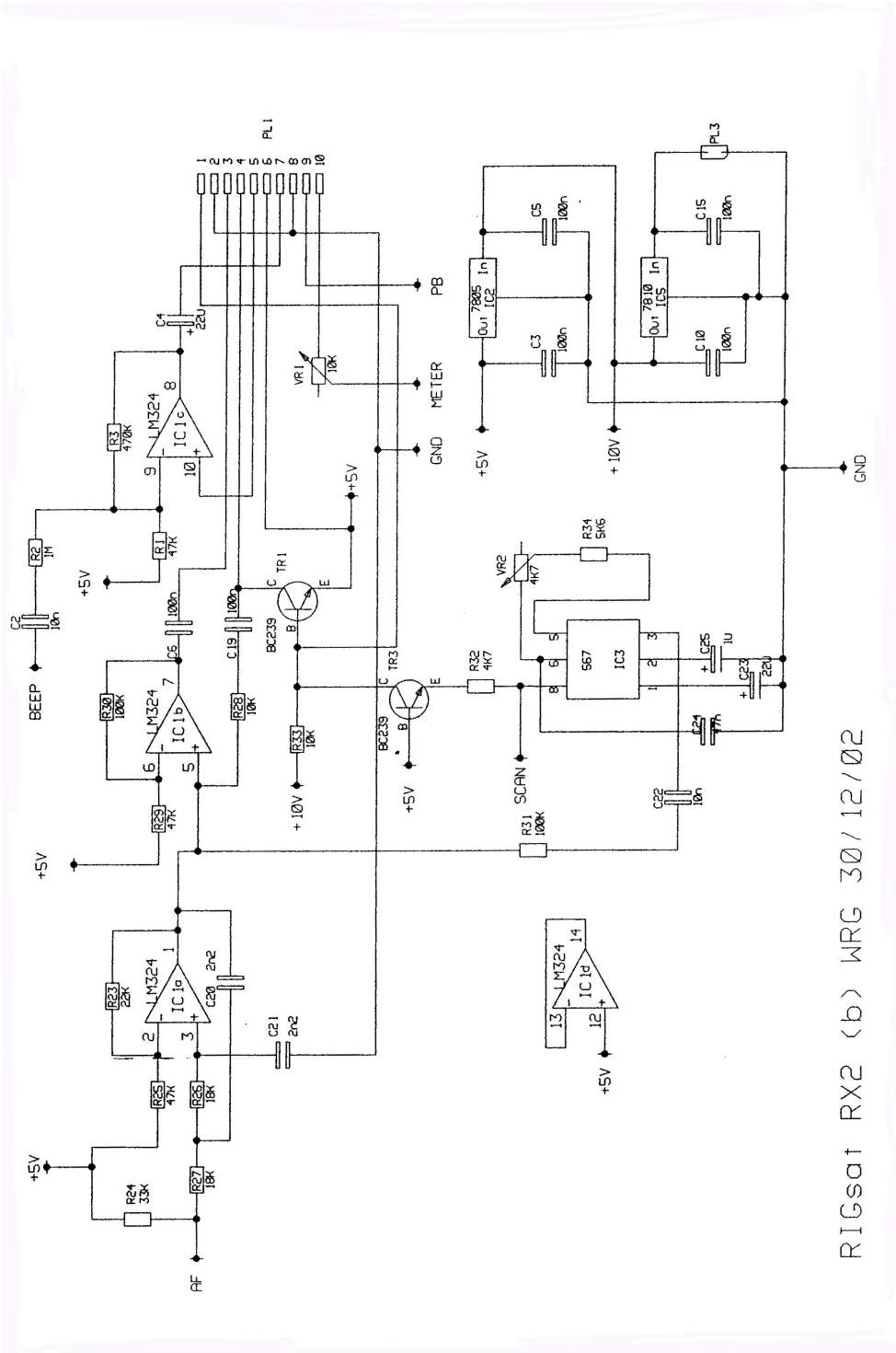

Diagram C – Controls etc

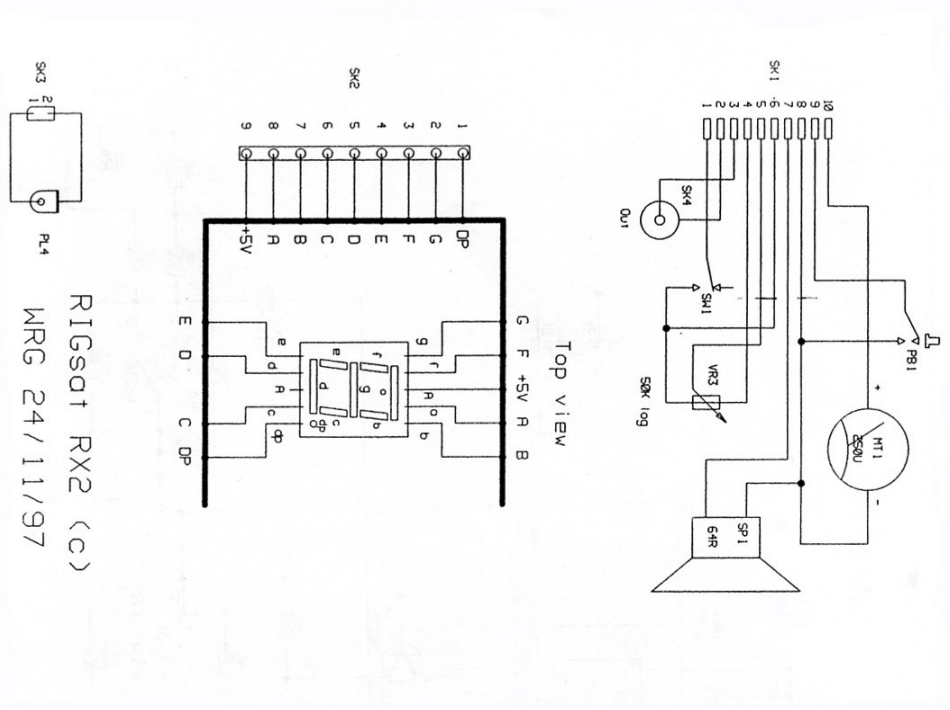

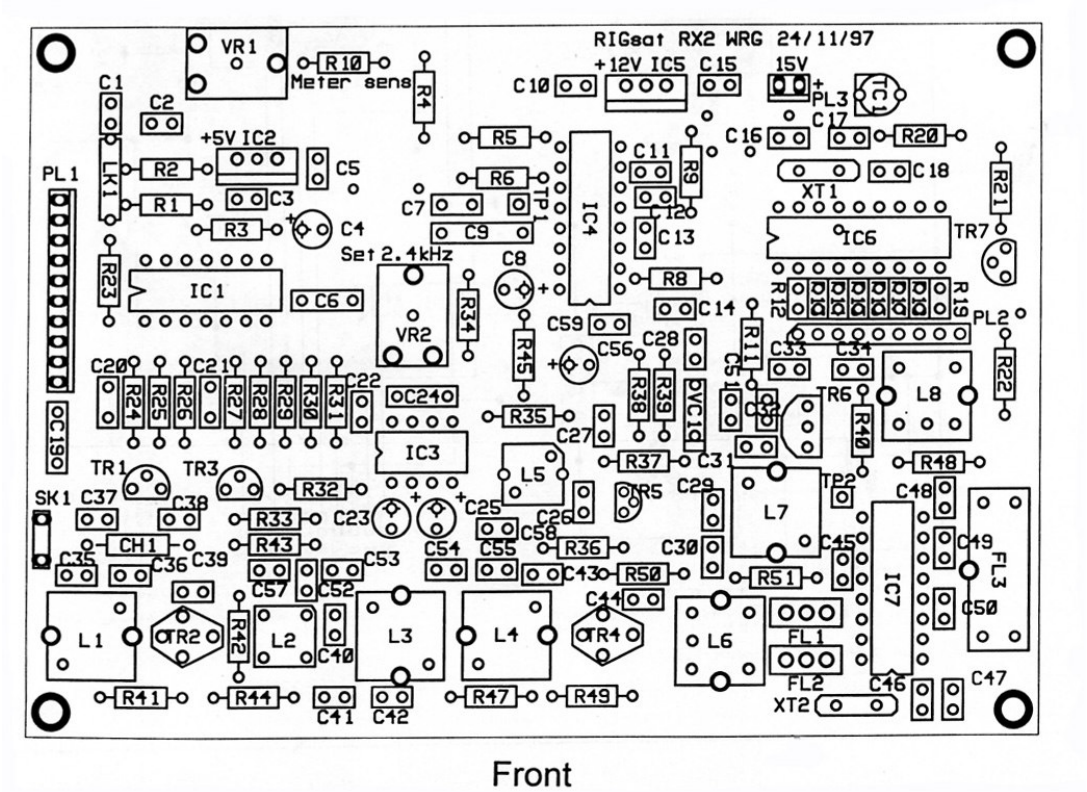
RIGsat RX2 WRG 24/11/97
VR1
R10
Meter sens
R4
C1
C2
LK1
PL1
+5V IC2
R2
R1
C5
C3
C4
R3
R23
IC1
C6
Set 2.4kHz
VR2
R34
C7
C9
R5
R6
TP1
C10
+12V IC5
C15
15V
PL3
IC4
C11
R9
C12
C13
R8
C14
C16
C17
R20
C18
XT1
IC6
TR7
R21
R12
R19
PL2
C8
C59
R45
C56
C28
R11
C33
C34
R22
C20
C21
R24
R25
R26
R27
R28
R29
R30
R31
C22
C24
C19
R35
C27
R38
R39
DVC1d
C5
C39
TR6
R40
L8
IC3
TR1
TR3
R32
L5
R37
C31
TR5
C29
TP2
R48
SK1
C37
C38
R33
C23
C25
C26
L7
C48
CH1
R43
C58
R36
C30
C45
C49
FL3
C35
C36
C39
C53
C54
C55
C43
R50
R51
IC7
C50
C57
C52
C44
L1
TR2
R42
L2
C40
L3
L4
TR4
L6
FL1
FL2
C46
C47
R41
R44
C41
C42
R47
R49
XT2

Front

ANNEX A – RESISTOR WORKING SHEET

Resistors	10	47	100	270	470	1k	2K2	2K7	4K7	5K6	8K2	10k	18k	22k	33k	39k	47k	100k	470k	1m	Not Pres
1																	R1				
2																				R2	
3																			R3		
4												R4									
5												R5									
6												R6									
7																					R7
8	R8																				
9												R9									
10							R10														
11					R11																
12					R12																
13					R13																
14					R14																
15					R15																
16					R16																
17					R17																
18					R18																
19					R19																
20	R20																				
21															R21						
22		R22																			
23														R23							
24															R24						
25																	R25				
26													R26								
27													R27								
28												R28									
29																	R29				
30																		R30			
31																		R31			
32									R32												
33												R33									
34										R34											
35						R35															
36								R36													
37			R37																		
38														R38							
39																	R39				
40							R40														
41																R41					
42		R42																			
43																					R43
44																		R44			not suppld
45							R45														
46																					R46
47				R47																	
48											R48										
49				R49																	
50																		R50			
51												R51									
	Br Bk Bk	Y P Bk	Br Bk Br	R P Br	Y P Br	Br Bk R	R R R	R P R	Y P R	Gn Blu R	Gy R R	Br Bk Or	Br Gy Or	R R Or	Or Or Or	Or Wh Or	Y P Or	Br Bk Y	Y P Y	Br Bk Gn	
Totals																					
9			1			1		1	1	1	1					1			1	1	
12	2	2		2									2	2	2						
6							3														3
8																	4	4			
7												7									
9					9																
51																					
VR1												VR1									
VR2									VR2												
VR3																					50K log